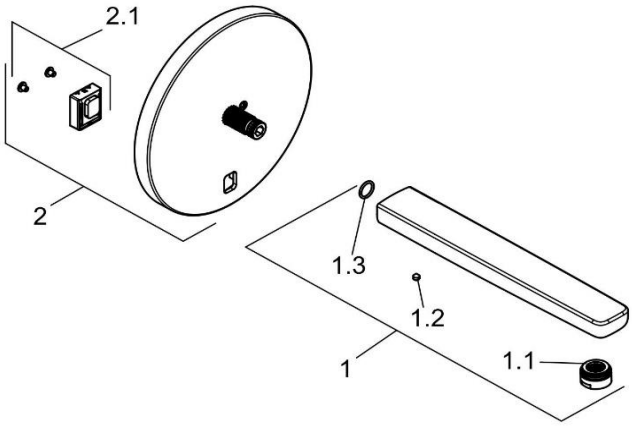

3840305		Waschtisch-Wandarmatur DN 15	wall mounted basin mixer DN 15
1	7327705-00	AUSLAUF	SPOUT
1.1	7339005-00	STRAHLREGLER	AERATOR
1.2	92234135-00	GEWINDESTIFT	GRUB SCREW
1.3	82520311-00	O - RING	O-RING
2	7328205-00	UP - ROSETTE	ESCUTCHEON, CONCEALED
2.1	7678600-00	INFRAROT-SENSOR	INFRARED-SENSOR